ARTWORK APPROVAL FORM

ORDER DETAILS

ORDER NUMBER:	X
ITEM CODE:	MH2204
QUANTITY:	X

ITEM DETAILS

FABRIC:	POLYESTER
GRAMMAGE:	STANDARD
ITEM SIZE:	STANDARD
X:	X
X:	X

MATERIAL COLOURS

FRONT PANEL:	☐	X
MESH:	☐	X
X:	☐	X
X:	☐	X
X:	☐	X

BUTTON:	☐	X
EYELETS:	☐	NONE
STITCHES:	☐	X
SANDWICH:	☐	NONE
STRAP:	☐	X

VISOR TOP:	☐	X
VISOR BOTTOM:	☐	X
SWEATBAND:	☐	X
SEAM TAPE:	☐	X
X:	☐	X

SCALE 1:5

FRONT
TECHNIQUE -
LOGO -
SIZE -
ATTENTION 1

BACK

STRAP / BUCKLE
- TECHNIQUE
- LOGO
- SIZE

ATTENTION 1

LEFT SIDE

RIGHT SIDE

SEAM TAPE
- TECHNIQUE
- LOGO
- SIZE

ATTENTION 1

VISOR TOP
TECHNIQUE -
LOGO -
SIZE -
ATTENTION 1

VISOR BOTTOM
- TECHNIQUE
- LOGO
- SIZE

ATTENTION 1

yourChoice

GENERAL COMMENT:

GENERAL COMMENT:

ATTENTION 1:

ATTENTION 2:

MH2204

HIGH PROFILE SNAPBACK HAT

Panels: 5
Profile: High
Fabric: Polyester foam + mesh
Sandwich: No

Other info.: Flat visor,
poplin (35% cotton 65% polyester)
sweatband, plastic closure.

SCALE 1:1

POLYESTER - STANDARD COLOURS

WHITE	284 C
BLACK	2290 C
406 C	1655 C
186 C	COOL GRAY 9 C
296 C	7641 C
287 C	2925 C
561 C	2101 C
109 C	225 C
ORANGE 021 C	340 C

POLYESTER MESH - STANDARD COLOURS

WHITE	2767 C
BLACK	286 C
193 C	3302 C
210 C	1365 C
217 C	7501 C

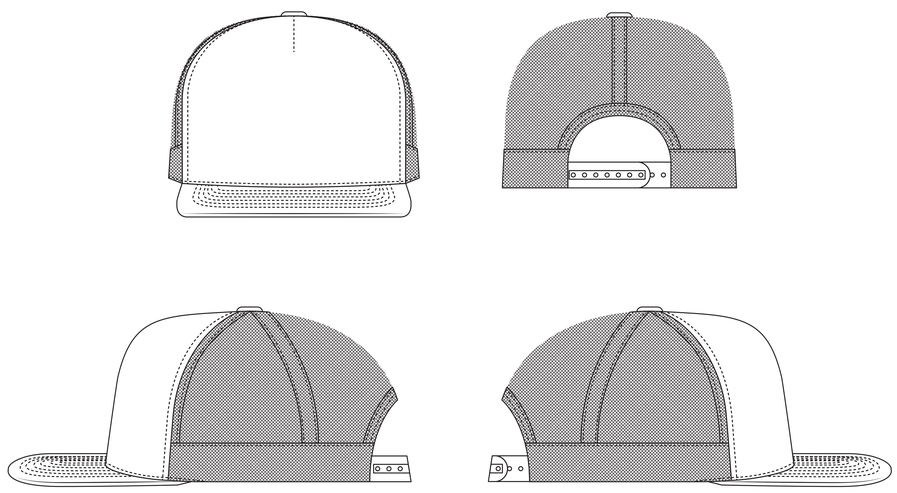

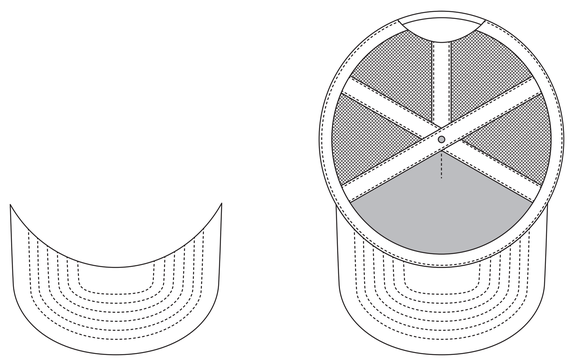

VISOR TOP

INSIDE

STANDARD CLOSURE:

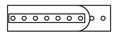

PLASTIC CLOSURE

OPTIONAL CLOSURE:

HOOK AND LOOP CLOSURE

INSIDE PARTS:

SEAM TAPE (FRAGMENT 1.5 cm)

SWEATBAND 48 x 3 cm